Historic, archived document

Do not assume content reflects current scientific knowledge, policies, or practices.

Reserve
A280.39
R31A

TWO-WAY THERMOGRADIENT PLATE FOR SEED GERMINATION RESEARCH

CONSTRUCTION PLANS AND PROCEDURES

ARS 51-41
NOVEMBER 1971

U. S. DEPT. OF AGRICULTURE
NATIONAL AGRICULTURAL LIBRARY
RECEIVED
JAN 17 1973
PROCUREMENT SECTION
CURRENT SERIAL RECORDS

MARKET QUALITY RESEARCH DIVISION

U.S. AGRICULTURAL RESEARCH SERVICE • U.S. DEPARTMENT OF AGRICULTURE

369510

ACKNOWLEDGEMENT

The author expresses his gratitude to Bernard M. Leese and Stanley F. Rollin, Grain Division, Consumer and Marketing Service, for their confidence and for financing the construction of the thermogradient plate described herein; to Richard W. Gallup, Grain Division, Consumer and Marketing Service, for technical assistance during construction; to Dorothy P. Skaggs, formerly, Grain Division, Consumer and Marketing Service, now Weed Investigations, Plant Science Research Division, Agricultural Research Service, for technical assistance during construction and for manuscript revisions; to George Livingstone, Instrumentation Research Laboratory, Agricultural Research Service, for the fabrication of the components described in figures 3, *C* and 7 (plate support), 10, and 12; and to many other persons whose cooperation made this thermogradient plate possible.

Trade names are used in this publication solely for the purpose of providing specific information. Mention of a trade name does not constitute a guarantee or warranty of the product by the U.S. Department of Agriculture or an endorsement by the Department over other products mentioned.

CONTENTS

Page

Introduction 1

Basic principle of operation 1

Construction procedures 4

Two-way thermogradient plate 4

Plastic cover for two-way thermogradient plate 5

Insulation box for two-way thermogradient plate 5

Switching the temperature gradient 12

Manual operation 12

Automatic operation 12

Water circulators 17

Monitoring the temperature gradient 17

Applying substratum to the plate surface 17

Planting seeds on two-way thermogradient plate 19

TWO-WAY THERMOGRADIENT PLATE FOR SEED GERMINATION RESEARCH: CONSTRUCTION PLANS AND PROCEDURES

By

Arnold L. Larsen[1]

INTRODUCTION

Studies of temperature effects on seed germination are usually limited to relatively few different temperatures because of restrictions imposed by the number of germinators available. However, the thermogradient plate can supply simultaneously an indefinite number of constant or alternating temperatures within a predetermined range. This feature enables the two-way thermogradient plate to fill a unique and important need in the study of temperature requirements for seed germination.

The first thermogradient plate was built at the Carnegie Institution of Washington at Stanford, Calif., by Halldal and French[2]. It was designed to study the response of algae to a cross-gradient of temperature and light intensity. This plate was small, 12 by 16 inches overall, because the entire working surface had to be covered with agar. In 1959, Elliott and French[3] published an article describing lettuce seed germination in a cross-gradient of temperature and light qualities using the same plate.

A two-way thermogradient plate similar to the one herein described has been in successful operation since 1966.

BASIC PRINCIPLE OF OPERATION

The two-way thermogradient plate is a square aluminum plate with channels mounted on the top and bottom sides along each of the four edges. Warm water is circulated through the channels along two adjacent edges and cool water through the channels along the opposite edges (fig. 1, *B*). Water introduced into the lower channel travels the length of the plate, passes into the upper channels through holes in the plate, and returns across the top surface of the plate via the upper channel. This establishes a continuous gradient of temperature in the plate between the channels. The limits of the gradient are established by the temperatures of the water in the channels.

The first thermogradient plates were constructed with water channels along two opposite edges only; therefore, they produced only one-way temperature gradients— a range of constant temperatures. To produce alternating temperatures, the two-way thermogradient plate (figs. 1, *A* and 2) was constructed with channels along all four edges. The channels along the two adjacent edges are coupled to one temperature source, and the channels along the two opposite edges are coupled to the opposite temperature source. In the schematic diagram (fig. 1, *B*), the loops leaving from the circulators (broken lines) and returning (solid lines) indicate the path of waterflow through channels located above and below the plate. Arrows on loops near the circulators indicate the direction of waterflow. Pinchcocks or solenoid valves (circles at beginning of each loop in fig. 1, *B*) are used to alternate the waterflow into one loop or the other. In their indicated position, the front and back loops are "on" and the left and right loops are "off."

[1] Formerly, research botanist, Seed Quality Investigations, Market Quality Research Division, Agricultural Research Service, Beltsville, Md.; present address, Colorado State Seed Laboratory, Colorado State University, Fort Collins, Colo. 80521.

[2] Halldal, P., and French, C. S. Algal growth in crossed gradients of light intensity and temperature. Plant Physiol. 33: 249-252. 1958.

[3] Elliott, R. F., and French, C. S. Germination of light sensitive seed in crossed gradients of temperature and light. Plant Physiol. 34: 454-456. 1959.

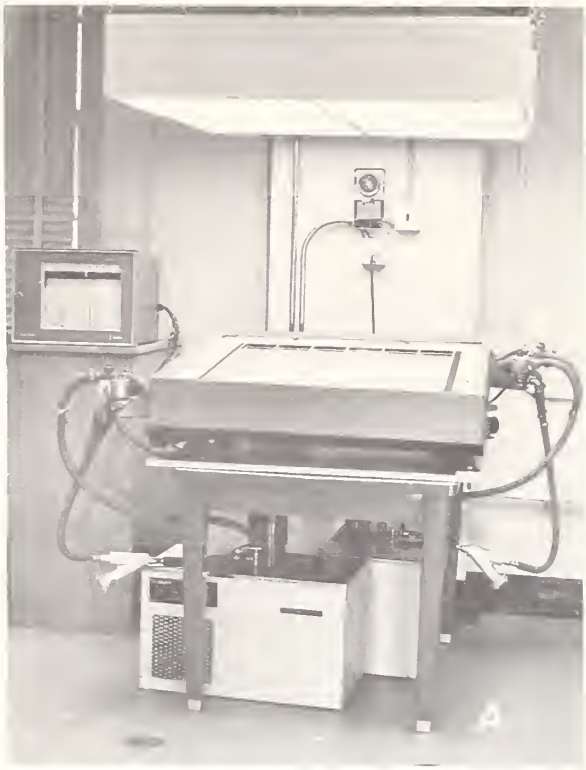

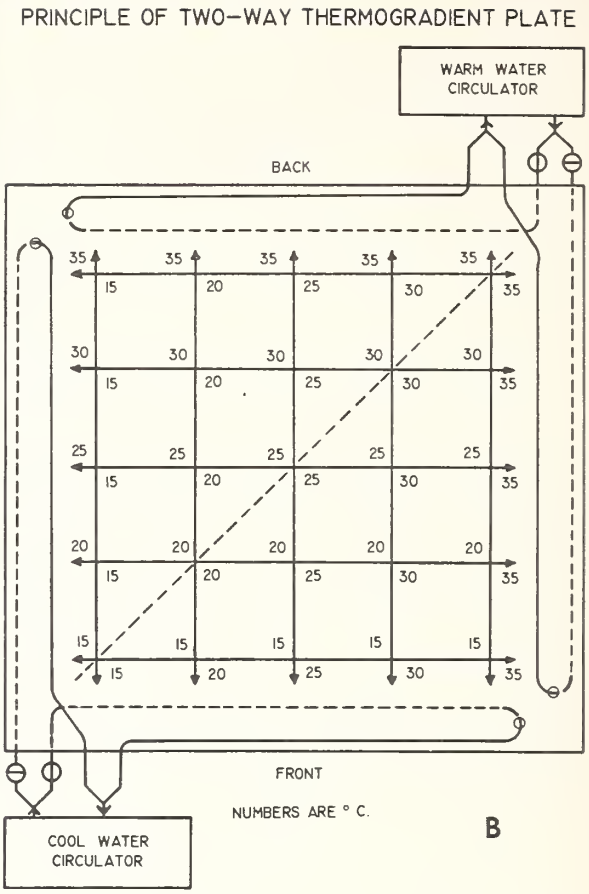

Figure 1.—*A*, Assembled two-way thermogradient plate with accessories (multi-point temperature recorder, timeclock, circulating water baths, and overhead light); *B*, Schematic diagram illustrating the principle of the two-way thermogradient plate operation. Temperatures shown are Centigrade.

Double-headed arrows indicate the direction of the temperature gradient when the loops at the end of the arrows are on (in this case the front-back gradient). Gradient directions are alternated at time intervals chosen by the scientist. The two numbers at each arrow intersect are representative temperatures at those points with hypothetical gradients from 15° to 35° C. The upper number is the temperature at that position during the time interval when the front-back gradient is in effect and alternates with the temperature indicated by the lower number when the left-right gradient is in effect. The broken diagonal line is the line of constant temperatures. The greater the distance between any point on the plate and the constant temperature line, the more extreme is the temperature change when the gradient directions are alternated. The back-left half of the plate (dividing the plate at the constant temperature line) is the reciprocal on the front-right half with respect to the time intervals alloted to each temperature gradient.

A. Aluminum planting surface of the thermogradient plate (See figs. 3, *A*, B, and *C* and 8, *A* and *B*)
B. Plate cover (See fig. 4, *A* and *B*)
C. Insulation box (See fig. 5)
D. Insulation cover (See fig. 6)
E. Plate support (See figs. 3, *C* and 7)
F. Tilting frame base and mounting board (See fig. 9, *A* and *B*)
G. Tilting frame stop (See figs. 9, *A* and 10)
H. Tilting frame with shaft and pillow block (See fig. 11, *A* and *B*)
I. Coupling assembly (See fig. 12)
J. Tilting motor (See fig. 13)
K. Solenoid valves and solenoid brackets (See fig. 14, *A* and *B*)

EXPLODED LINE DRAWING OF TWO-WAY THERMOGRADIENT PLATE

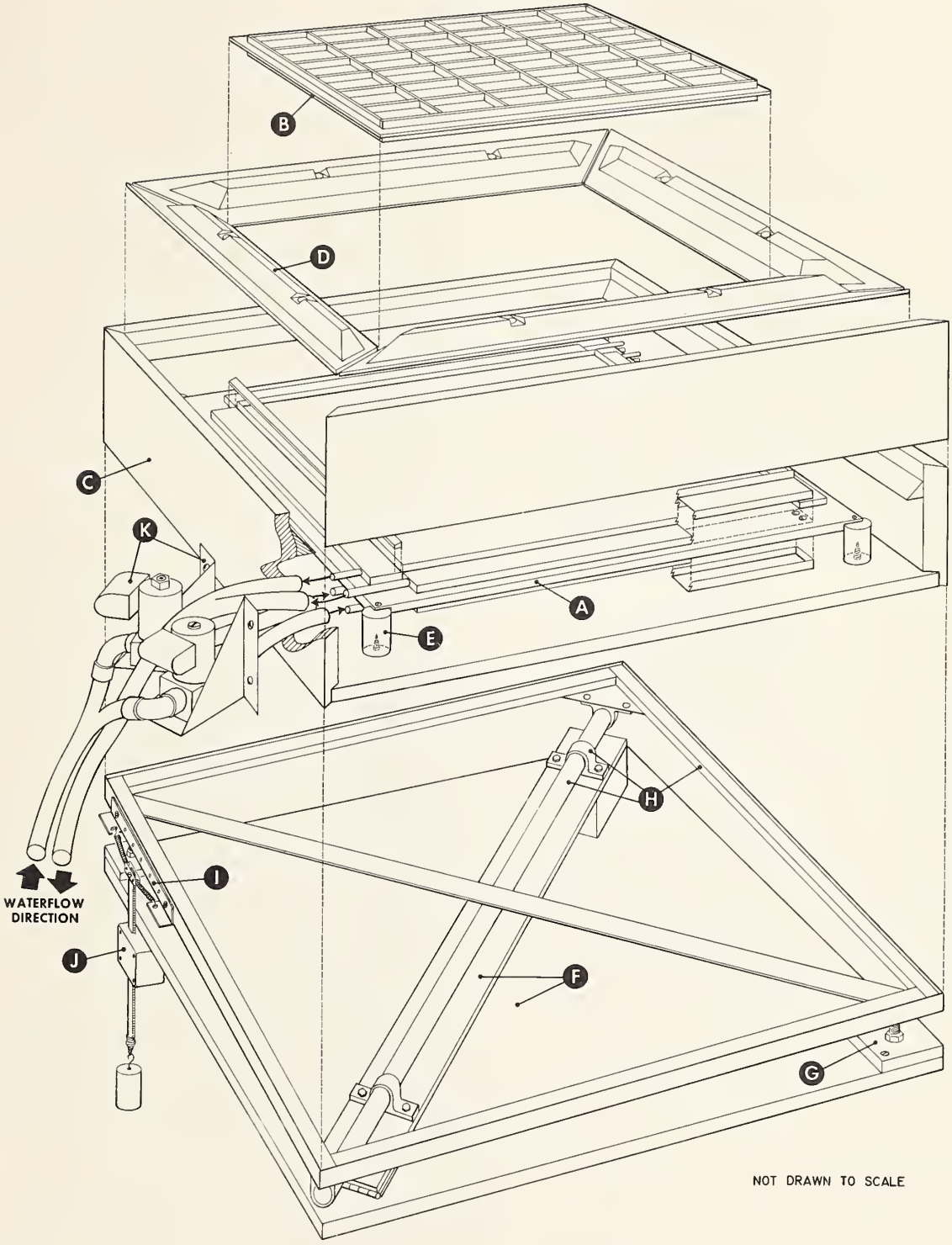

Figure 2.— Exploded line drawing of the two-way thermogradient plate showing the overall assembly and the relationship between the component parts. This is not drawn to scale. Arrows indicate the waterflow from channels to circulator and return. See figure 1, *B* for details.

CONSTRUCTION PROCEDURES

The dimensions and procedures of construction mentioned in the following sections are not necessarily optimum. Too few two-way thermogradient plates have been constructed to adequately determine the best combination of the various factors. Because results from the current prototype are satisfactory, the plans and material specifications for its construction are given here. Wherever experience has shown that an improvement might be made, this will be indicated.

Two-Way Thermogradient Plate

The main plate component of the current prototype is made of an aluminum alloy designated as "1100-F." This component is the first item in the following list of items needed for assembling a two-way thermogradient plate. The thermal conductivity of this alloy is better than that of previously used materials, being at least 99 percent aluminum and 1 percent silicon, iron, copper, and manganese. The rigidity and weldability of alloy 1100-F, and its resistance to corrosion are very good. Although the thermal conductivity of alloy 6061-T6, which was used in constructing an earlier thermogradient plate is lower than that of 1100-F, results with 6061-T6 were satisfactory and it is more readily available. All accessory parts are made from the 6060 aluminum alloys because the stock materials for these parts are not available in 1100-F. The two alloys are compatible for welding.

The items needed for assembling a two-way thermogradient plate are:

- Aluminum alloy plate, 34 by 34 by 3/8 inches (1 required)
- Extruded aluminum alloy channels, 1 3/4 inches wide, 3/4 inch deep, 1/8 inch thick, and 30 inches long (8 required)
- Aluminum pipe nipple, 1/4-inch standard and 1-1/2 inches long (4 required)
- Aluminum pipe nipple, 1/4-inch standard and 3-1/2 inches long (4 required)
- Aluminum alloy strips 30 by 1/2 by 1/8 inches (4 required)
- Aluminum butt plate, 1-1/2 by 5/8 by 1/2 inches (16 required)
- Aluminum butt plate, 1-1/2 by 5/8 by1/4 inches (4 required)

These items are assembled as indicated in figure 3. Only the upper surface of the thermogradient plate is shown in the full view drawing (fig. 3, *B*); the undersurface of the plate has the same attachments (excluding the risers shown in fig. 3, *B*) as the upper surface, but the direction of the channels is reversed so that the upper spouts are directly over the lower spouts. The first item in assembly is to drill holes in the plate and riser as indicated in figure 3, *B* and *C* Details A, B, and C. Next the butt plates are tack welded into position in the channels as indicated. Small pilot holes (about 1/8 inch) are drilled in the channels on the centers indicated in Figure 3, *C*, Detail B, top and end views for later use as a guide to drill and tap for the 1/4-inch pipe nipples. The inside corners of the channels are filed back as indicated in figure 3, *C*, Detail B, top view to facilitate the laying down of a continuous, watertight, welded seam. Experience has shown that flaws in the welded seam at these corners can let water leak from one channel into another. Next the channels are clamped in position and all external junctions between the plate, channels, and butt plates are sealed in a continuous, watertight heliarc-welded seam. Care must be taken that the enclosed area has 90° corners, that opposite channels are parallel, and that the upper channels are exactly over the lower ones. The precision welding of nearly 50 feet of a continuous, watertight seam requires the service of a skilled welder. Poor workmanship can result in water leaks and a warped or distorted thermogradient plate. After the seams are welded, the channels are drilled and tapped for the 1/4-inch pipe nipples (fig. 3, *D*). The threads should be covered with sealing compound before the nipples are installed. Finally, the riser is tack welded into position on the inside edge of the upper channels. The rest of the junction between the riser and channels can be made moisture proof by filling it with epoxy glue. The inside corners made by channels and risers should be sealed by welding to prevent moisture loss from seed germination substratum during research operation. Before the thermogradient plate is mounted in the insulated box, all channels should be checked thoroughly for leaks by circulating water through each channel at the maximum force that will be generated by the circulator that will eventually be used.

After the plate is constructed, corrosion of the surface might be controlled by spraying with a thin plastic coating or by anodizing. Neither procedure has been thoroughly tested. Any corrosion-control treatment that insulates the surface of the plate should not be used.

Plastic Cover for Two-Way Thermogradient Plate

The plate cover (fig. 4, *A* and *B*) maintains the temperature gradient and also functions as a barrier against moisture loss from the seed germination substratum. During operation, the plate is sloped so that the warm side is higher than the cool side. Sloping stratifies the air under the cover and minimizes convection currents. Moisture condenses on the underside of the cover surface over the warmer areas of the plate surface. The moisture droplets enlarge, coalesce with adjacent droplets, and as their weight increases, slide downward, still affixed to the underside of the cover by surface tension. Finally, the droplets fall to the plate surface in the cool zone. This causes the substratum on the warm zone of the plate surface to become dry and that on the cool zone to become excessively wet. To prevent this action, dams are attached at regular intervals on the underside of the cover. The dams must be placed perpendicular to the direction of the temperature gradient. Since temperature gradient can operate in two directions, one perpendicular to the other, the dams must be attached in both directions (fig. 4).

The plastic cover warps when exposed to moisture-laden air on one side and relatively dry air on the other side, continuous conditions when the plate is in research operation. Therefore, dams are attached to both sides (fig. 4, *A*), and when warping in one direction is excessive, the cover can be turned over to permit warping in the opposite direction. Care must be taken that the grid made by the dams will fit inside the risers on the thermogradient plate. This is why dimension D (outer short pieces in fig. 4, *B*) is slightly shorter than Dimension C (inner short pieces). To give added strength to the cover, the direction of the long (Dimension B) and short segments (Dimensions C and D) of the inner part of the grid are reversed on opposite sides. The rubber stripping is affixed to the outer lip of the cover on both sides to prevent moisture loss from the testing surface of the plate. Moisture loss can be further reduced by placing four 2½-pound lead weights along the edges of the plastic cover.

The cover and the attached dams are constructed from a 1/4-inch clear acrylic plastic plate, (common trade names for this material are Plexiglas, Lucite, and Acrylite).

The items needed for assembling the plate cover are:

- Clear plastic sheet, 31 by 31 by 1/4 inches (1 required)
- Clear plastic strips (A), 29-5/8 by 1/2 by 1/4 inches (8 required).
- Clear plastic strips (B), 29-3/8 by 1/2 by 1/4 inches (10 required)
- Clear plastic strips (C), 5-3/4 by 1/2 by 1/4 inches (40 required)
- Clear plastic strips (D), 5-1/2 by 1/2 by 1/4 inches (20 required)
- Rubber stripping (adhesive on one 1/2-inch surface), 1/2 by 1/4 inch and 25 feet long

The plastic should be purchased with masking on both sides to protect the surface during construction. The masking is stripped away from the areas where dams are to be attached. The stripped areas should be somewhat wider than the dam being attached so that the masking does not become trapped under the adhesive. The plastic strips are held in position and a commercial plastic solvent is applied to the junctions with a dropper. The highly volatile solvent spreads quickly throughout the junctions, causing the plastic parts to "melt" together within 1 minute. Because the solvent is highly volatile, the plate cover should be constructed in a well-ventilated area.

Insulation Box for Two-Way Thermogradient Plate

The two-way thermogradient plate is mounted inside a box (fig. 5) so that the plate can be insulated on the undersurface and around the channels. This insulation prevents uncontrolled temperature moderation by ambient temperatures. Four insulation cover sections (fig. 6) span the opening between the risers on the thermogradient plate and the sides of the insulation box. Materials used for construction of the box are: 3/4-inch pine for the sides, 1/2-inch plywood for the bottom, and pressed wood and pine for the insulation cover sections. Materials should be treated to withstand moisture absorption. Dimensions are given in the design drawings.

Four acrylic plastic plate supports (figs. 3, *D* and 7) attach the thermogradient plate to the bottom of the insulation box. To assemble, attach the plate supports to the corners of the thermogradient plate with 8-32 round-head screws approximately 1 inch long. Fill the bottom of the box with insulation to a depth that will insure complete contact of the insulation to the bottom surface of the plate when the plate is pressed down and the supports are attached to the bottom of the box (fig. 8, *A*).

Before the rest of the space around the water channels is filled with insulation, attach the rubber

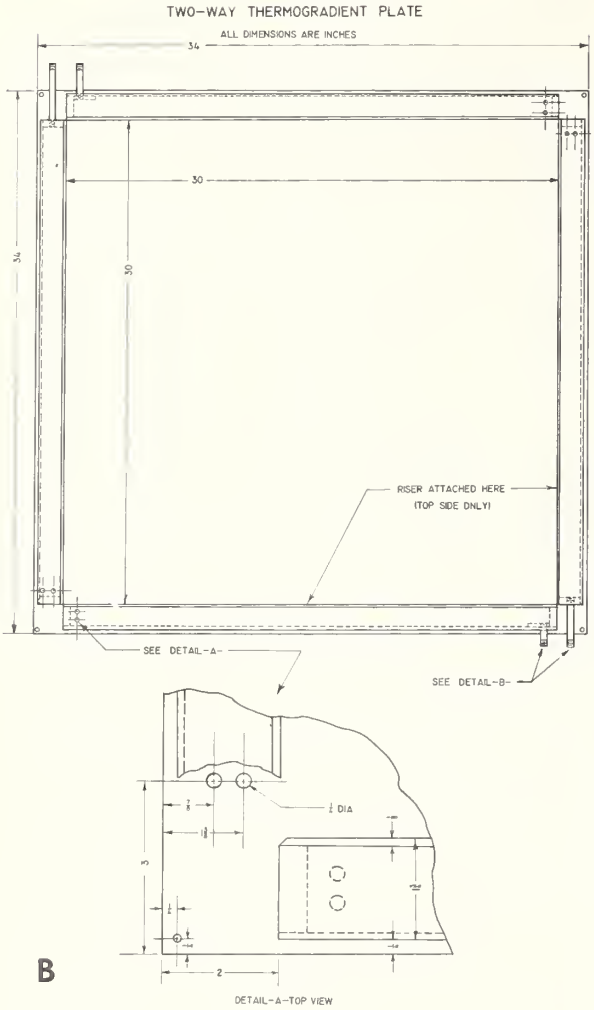

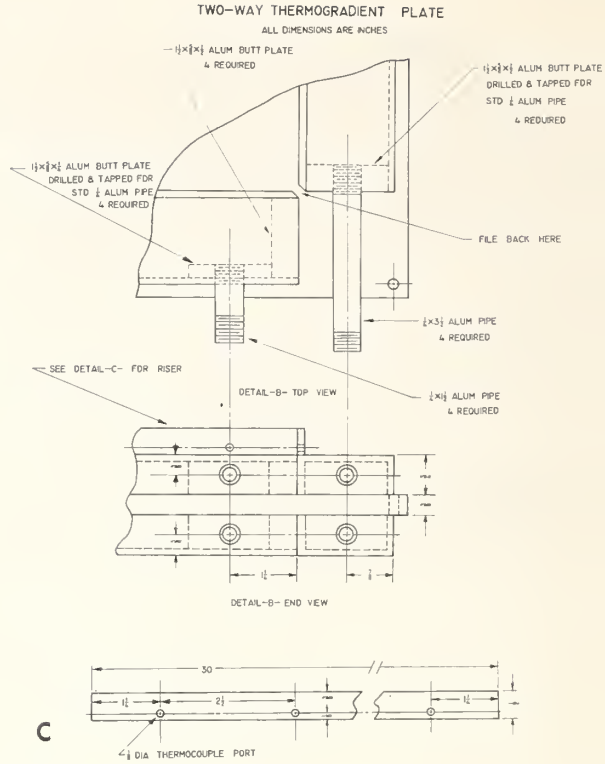

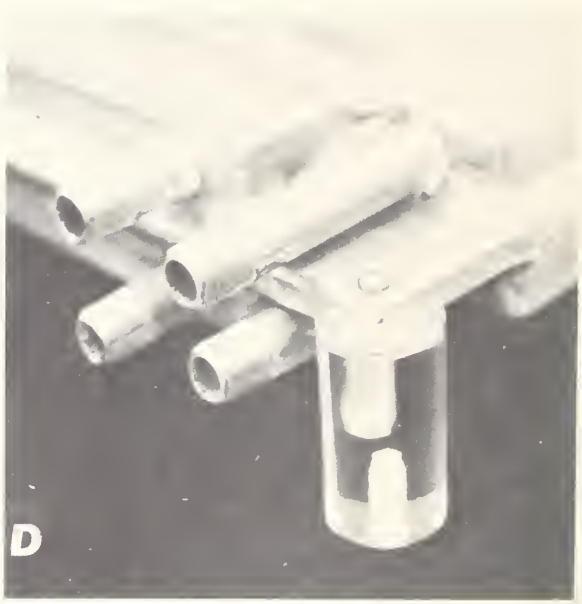

Figure 3.—*A*, Planting surface of the two-way thermogradient plate showing channels, spouts, and riser in place. *B*, Detail A—design drawing of top view of plate with corner. *C*, Detail B—side and top views of spout corner, and Detail C—riser attached to upper channel. *D*, Channel and spout detail of thermogradient plate with attached plate support.

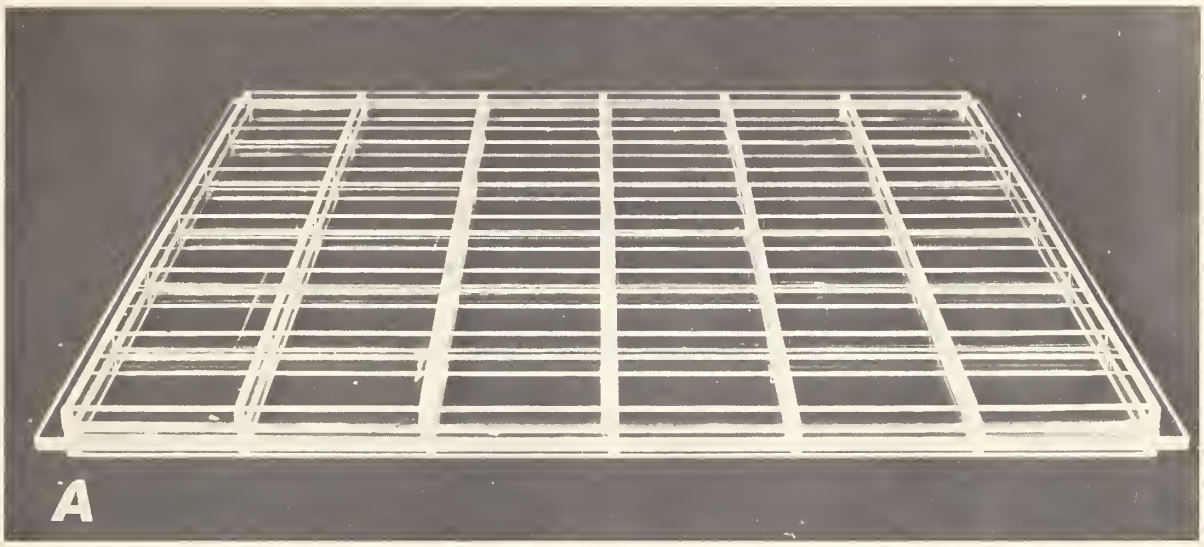

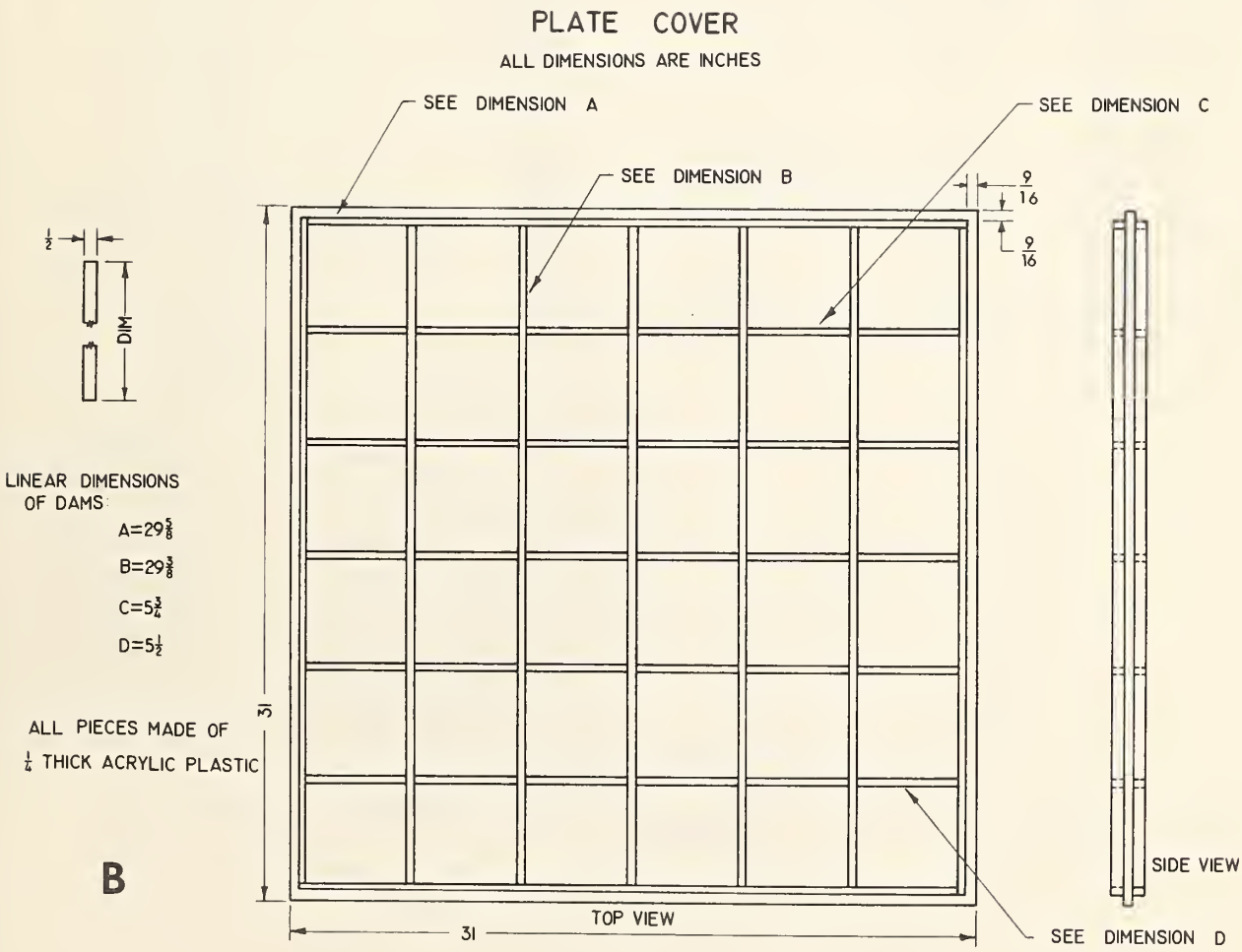

Figure 4.—*A*, Plastic thermogradient plate cover; *B*, design drawing of top and side view of plate cover.

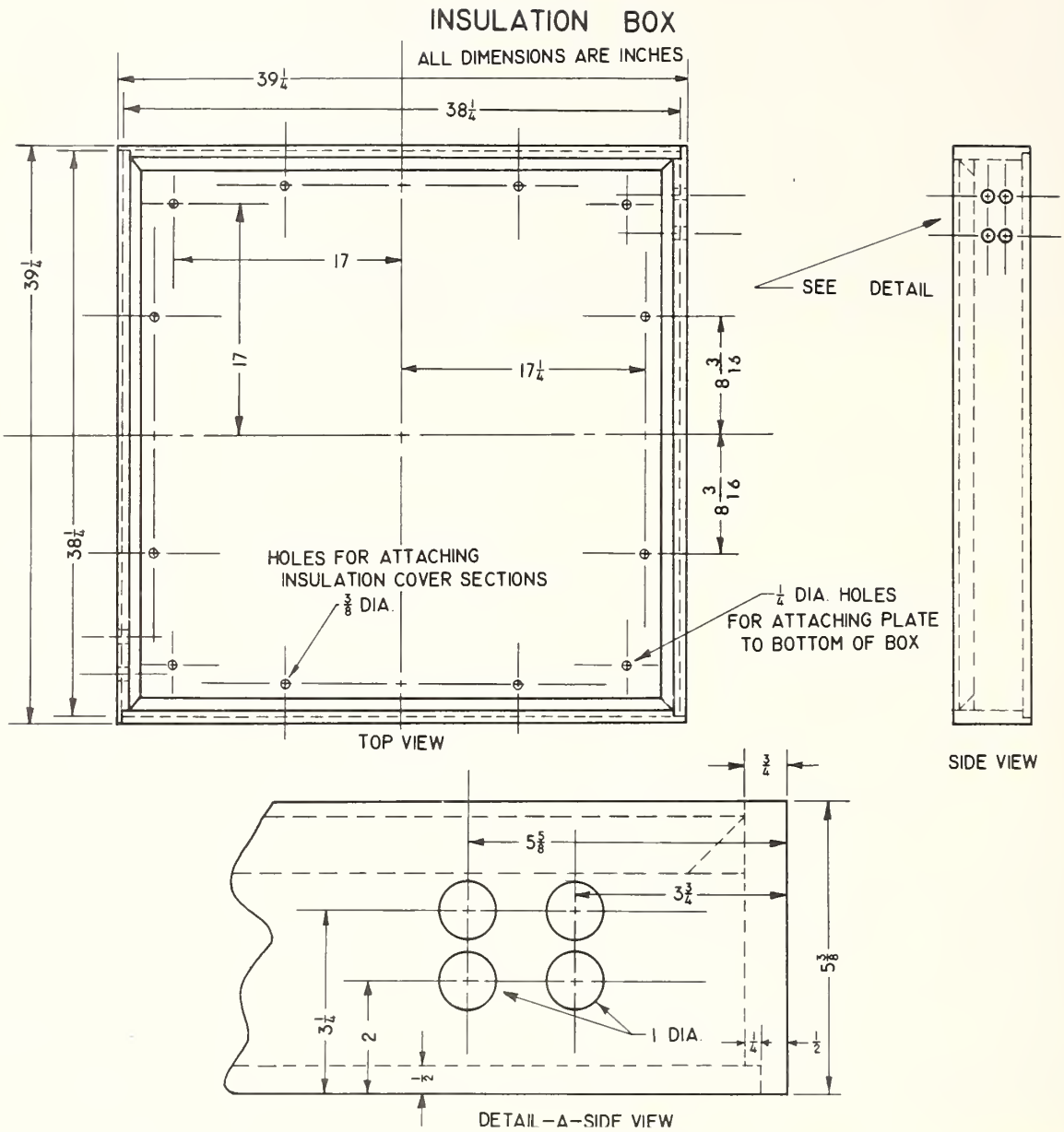

Figure 5.—Design drawing of top and side view and detail of insulation box. See figure 8, *B* for more details on dimensions.

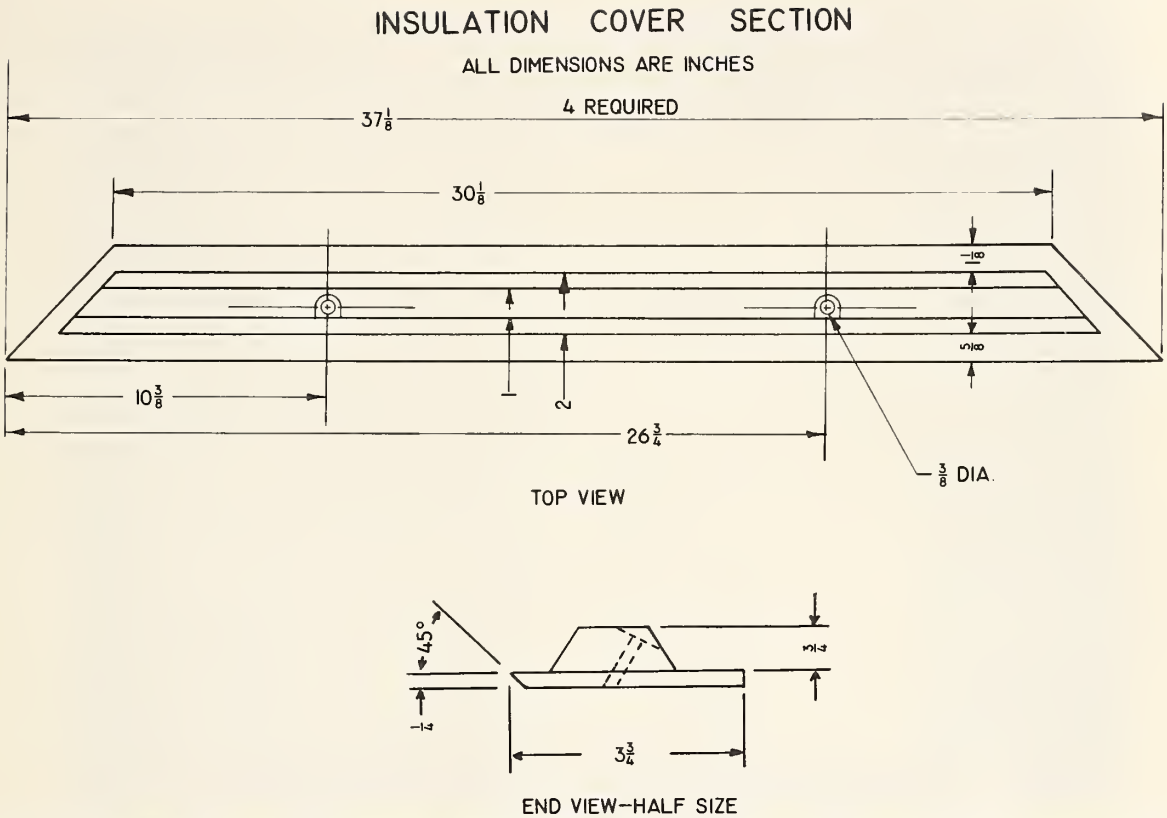

Figure 6.—Design drawing of top and end views of insulation cover section. See figure 8, *B* for more details and installed position.

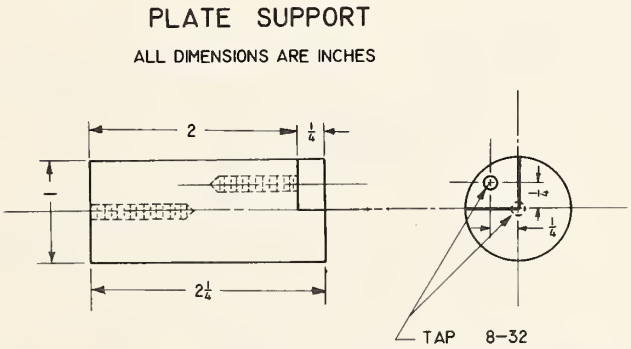

Figure 7.—Design drawing of side and top views of plastic plate support. See figure 3, *C* for installed position.

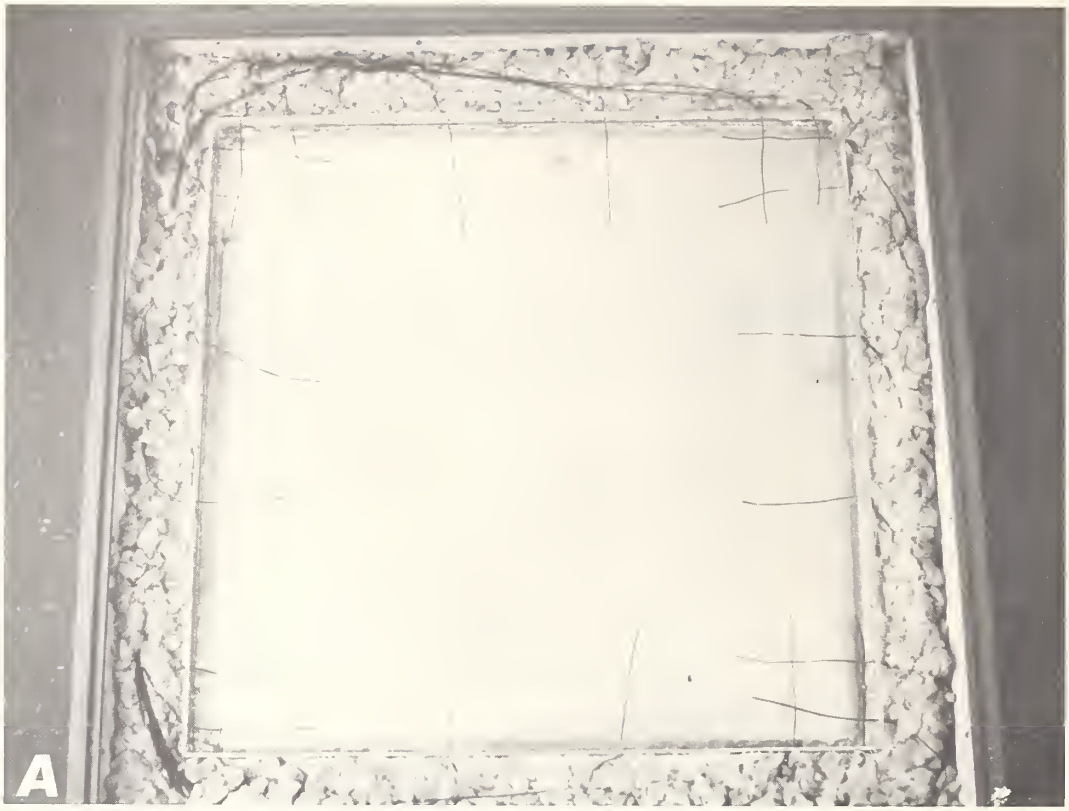

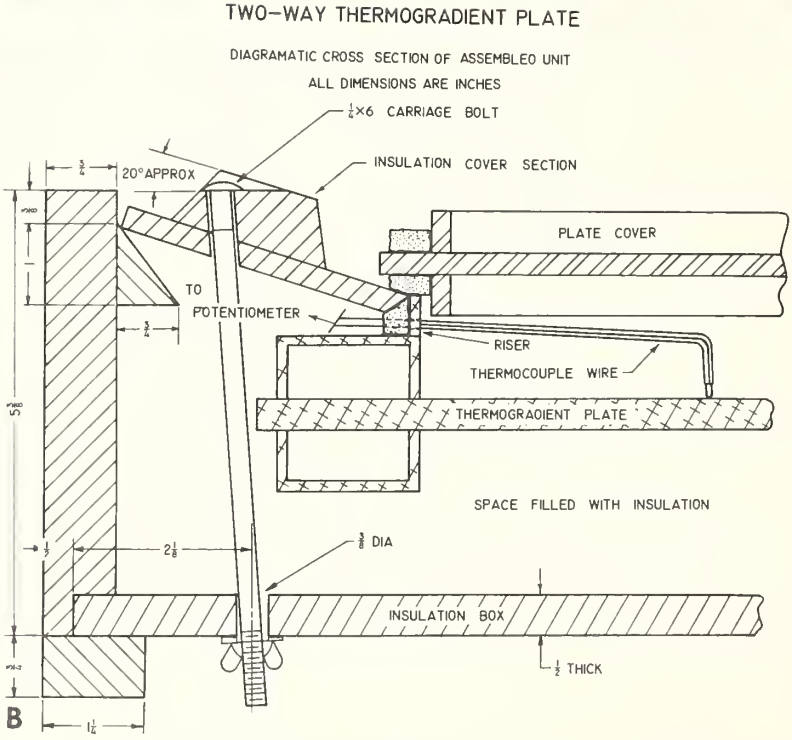

Figure 8.—*A*, Thermogradient plate placed in insulation box with insulation cover sections removed to show positioning of thermocouple wires and loose insulation covering the channels; *B*, diagram of crossection view of one side of the two-way thermogradient plate installed in insulation box, showing detail and spatial relationship between component parts.

tubing to the pipes, covering the pipe threads completely (fig. 3, *D*). Rubber tubing with 1/2-inch inside diameter fits snugly over the pipe and supplies an adequate flow of water. A 1/4-inch-thick tube wall provides adequate insulation to prevent water temperature changes due to the ambient air temperature. Install the tubing in the arrangement indicated in figure 1, *B*. To get proper contact between the water and the plate surface, introduce the water into the bottom channel. The water travels the length of the channel, passes through holes drilled in the plate, returns across the upper surface of the plate by way of the upper channel, and returns to the water circulator. The tubing connecting the pipes on the thermogradient plate to the 1/4-inch Y-connector should be long enough so that the lower pair can accommodate pinchcocks (for manual switching of waterflow) or solenoid valves (for automatic switching) in the position indicated by the circles in figure 1, *B*. Connect the remaining arms of the Y-connector to the circulators with the same rubber hose. Use hose clamps on all connections to prevent water leaks. Test for leaks by turning the circulator on to full flow. If no leaks are found, fill the rest of the space around the water channels with insulation. Apply a strip of adhesive-backed foam rubber to the beveled edge of the insulation cover sections (fig. 8, *B*). The position the thermocouple wires (see Monitoring Temperature Gradient). Bolt the insulation cover sections into position.

Switching the Temperature Gradient

Alternating temperatures are produced by switching the temperature gradient at right angles to the preceeding one at regular time intervals.

Manual Operation

The direction of the temperature gradient is established by applying a hose pinchcock to one of the arms above the lower Y-connector on both corners of the two-way thermogradient plate (positions indicated by circles in fig. 1, *B*). Make sure that channels on the opposite sides of the plate are operating as pairs. When one pair is off, the other is on. The gradients are switched, the one at right angles with the other, by switching hose pinchcocks to the other arms above the lower Y-connectors.

The slope of the plate and the waterflow direction must be switched at the same time so that the warm zone of the new gradient is higher than the cool zone. The thermogradient plate, mounted in the insulated box, is placed on a sturdy table. The slope of the plate is regulated by permanently positioning the left front table leg (the corner associated with the cool-water hoses) at floor level and permanently elevating the right rear table leg (the corner associated with the warm-water hoses) 3 to 4 inches above floor level. With a 3- to 4-inch-thick wedge, the other two legs are alternated up or down, depending on the direction of the gradient of the plate. It is imperative that the functioning channels be horizontal to insure that the water is in constant contact with both the upper and the lower plate surfaces for precise temperature control on the planting surface.

Automatic Operation

There are many advantages for automating the temperature gradient switchover: Automation insures punctual switching of the temperature gradients so that time intervals are uniform; it eliminates the need for weekend supervision of the apparatus; and it enables the investigator to experiment with a variety of time intervals without added inconvenience.

The items necessary for automating the gradient switching are shown in figures 9 through 14.

The tilting frame base (fig. 9, *A*) should rest on a sturdy table of convenient height. A groove is cut into the upper surface at one corner to facilitate the flush attachment of a hinge that attaches one end of the diagonal mounting board to the tilting frame base.

The two tilting frame stops (figs. 10 and 11, *A*) are mounted over the holes indicated in the details of figure 9, *B*. The holes in the base should be larger than the bolts so as not to interfere with free movement of the bolts while being adjusted.

The tilting frame (fig. 11) is bolted to the mounting board. The degree of tilt in the direction of the shaft is obtained by raising the unhinged end of the mounting board. The extent of tilt in the direction perpendicular to the shaft is determined by the height setting of the bolt in the tilting frame stops. The tilting frame does not provide adequate support for the insulation box at the corners not supported by the shaft. Some redesigning would be beneficial here.

The coupling assembly (figs. 12 and 13) used to connect the tilting frame with the tilting motor is attached to the tilting frame near one of the corners not associated with the shaft. In this prototype, a greenhouse vent motor (fig. 13) was used quite successfully to activate the tilting frame.

Because it is difficult to match the travel distance of the tilting frame with the exact thrust of the vent motor shaft, springs were incorporated into the

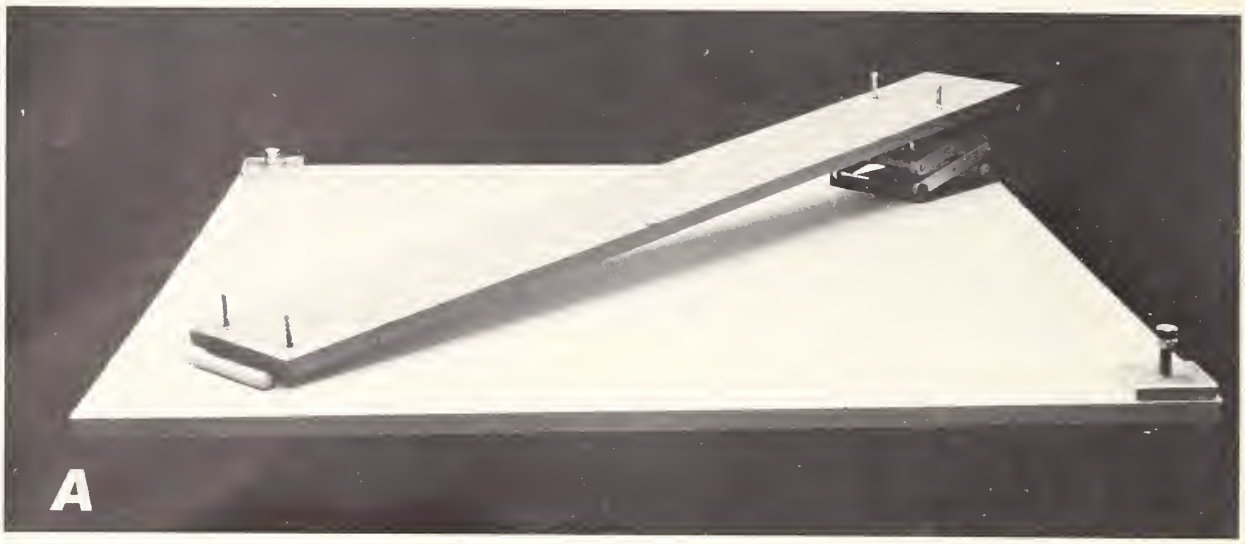

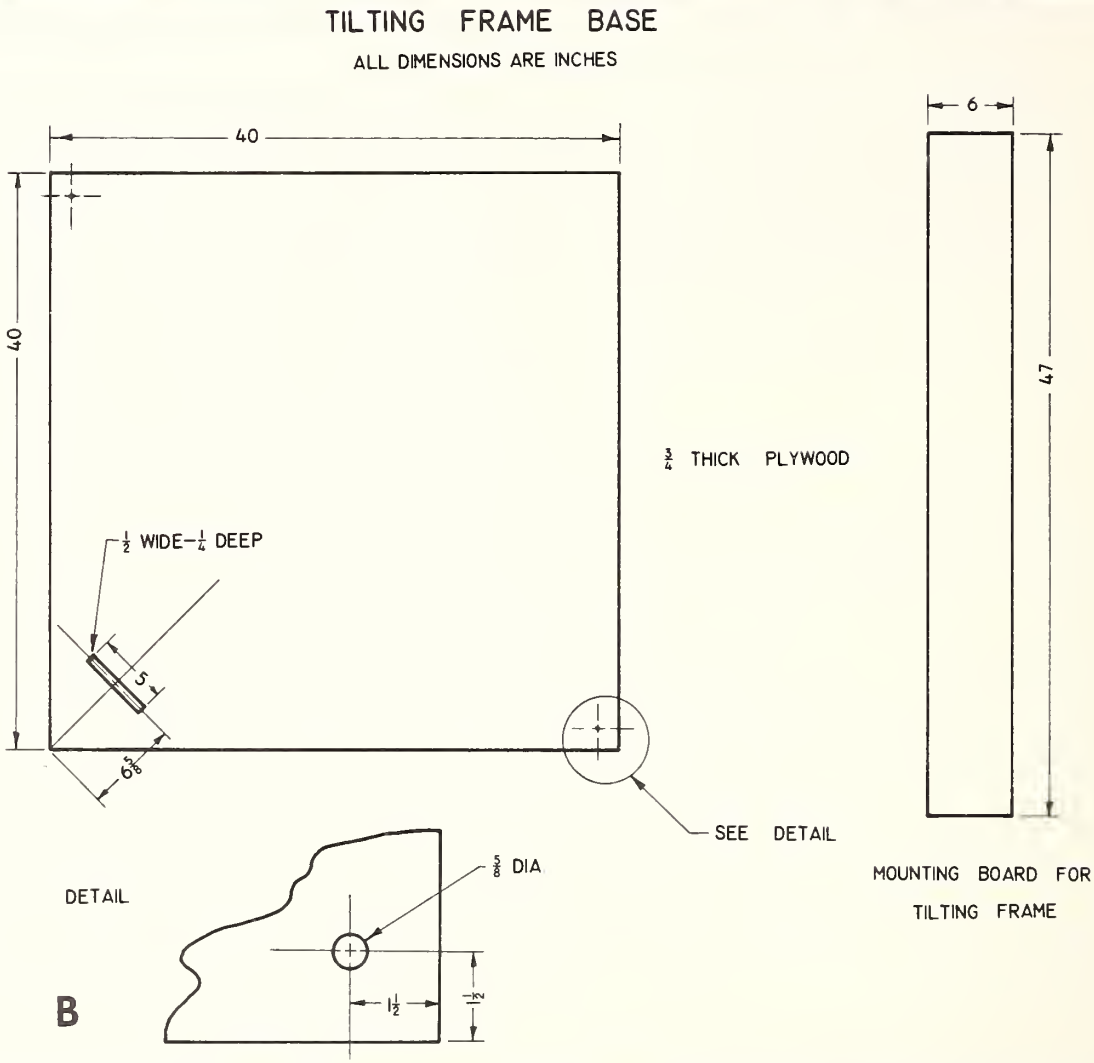

Figure 9.—*A*, Tilting frame base with mounting board and tilting stops; *B*, design drawing of top view of tilting frame base and mounting board.

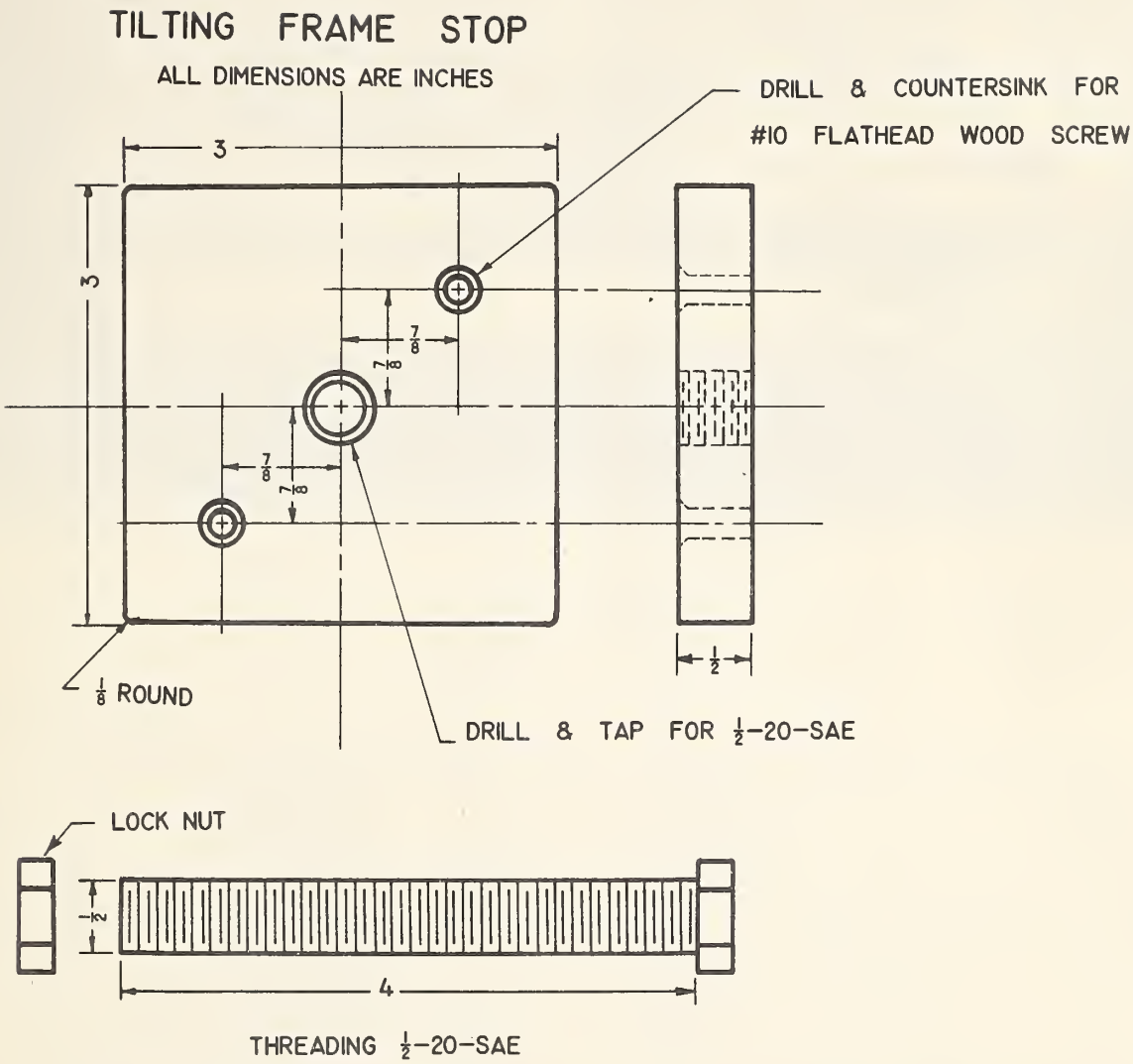

Figure 10.—Design drawing of tilting frame stop, top and side views with bolt and lock nut.

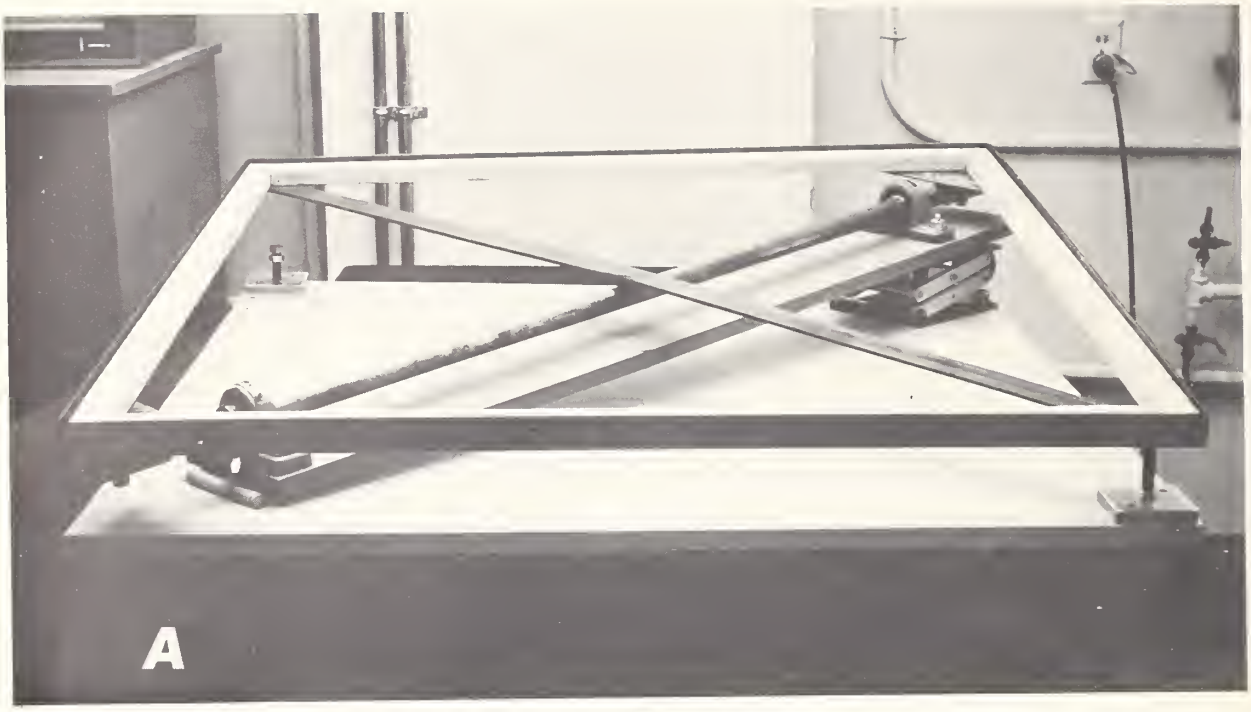

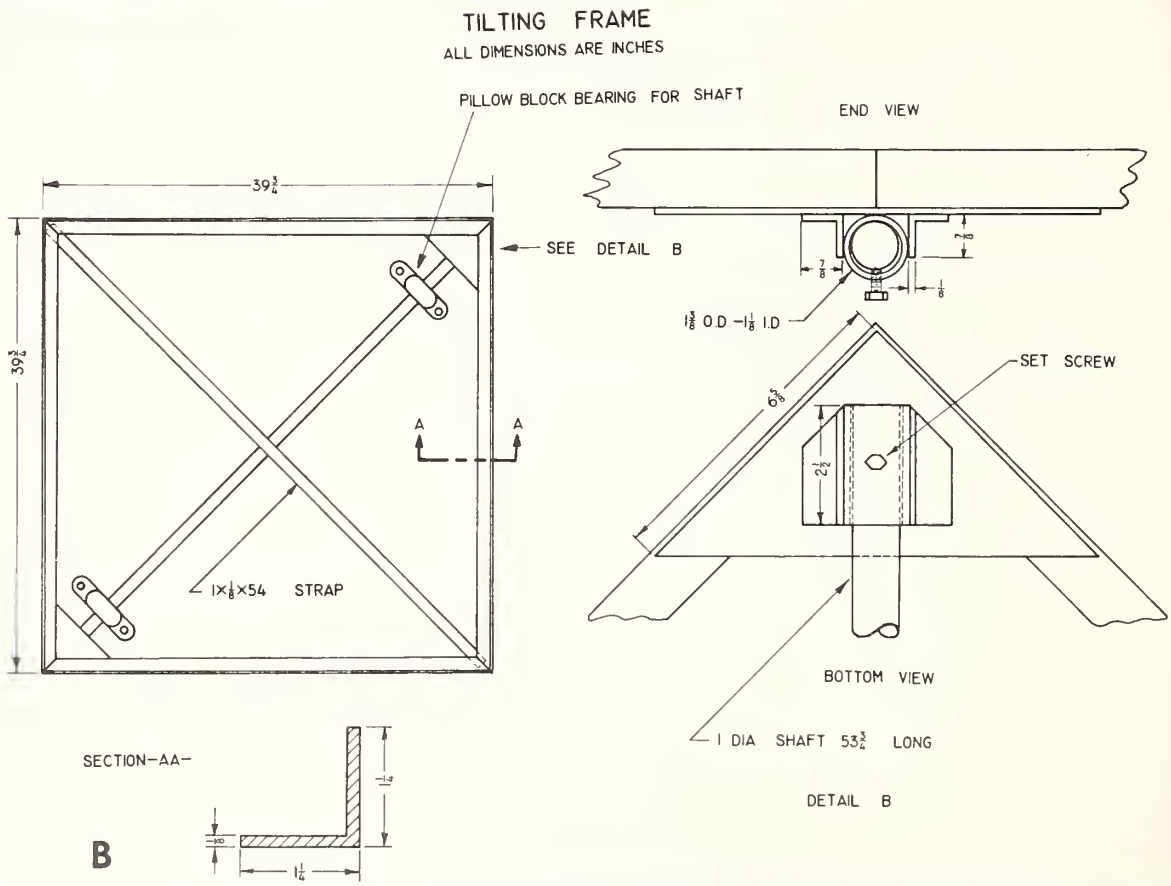

Figure 11.—*A*, Tilting frame with shaft and pillow block bearings on the base and mounting board; *B*, design drawing of top view and details of tilting frame, shaft, and positioning of pillow block bearings.

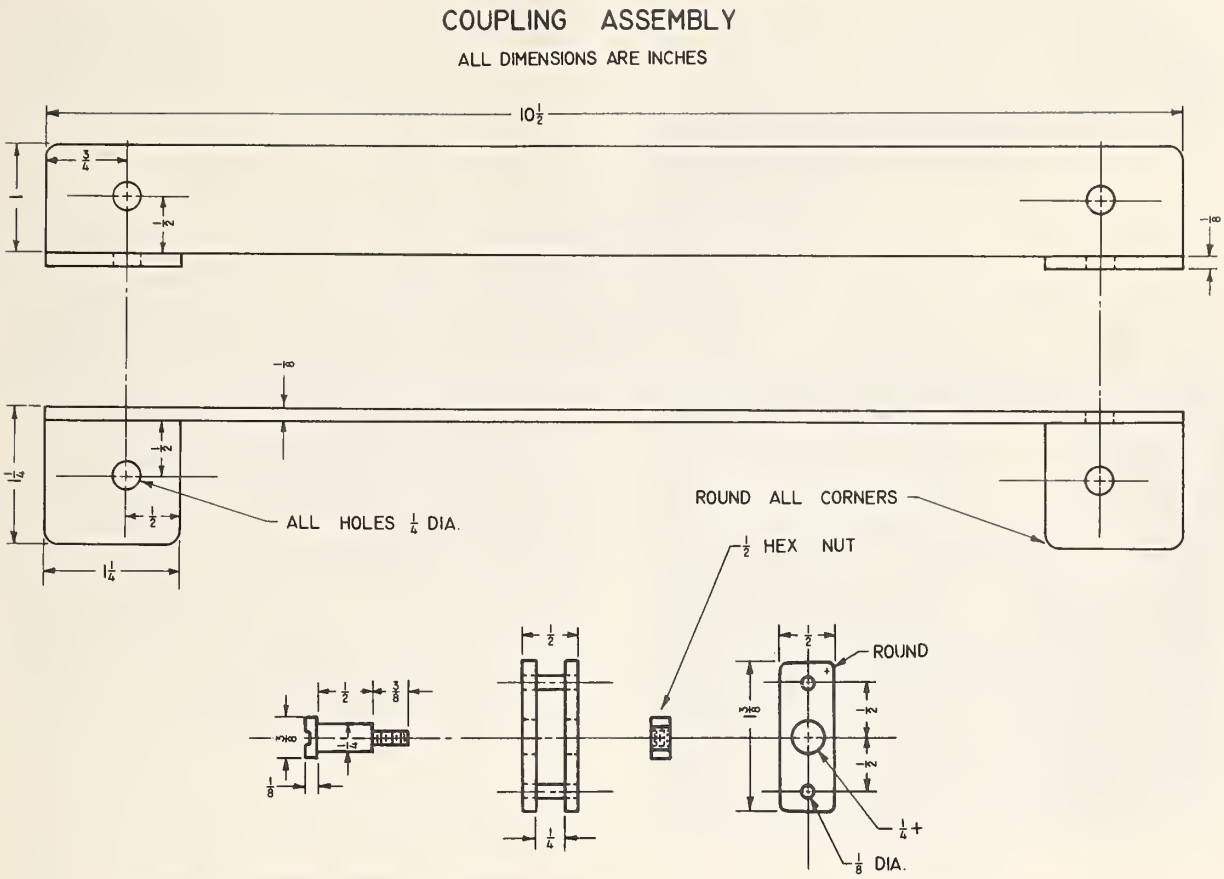

Figure 12.—Design drawing of coupling assembly for attaching tilting motor to tilting frame.

coupling assembly to eliminate a solid connection between them. This would reduce the danger of damaging the motor or tilting frame if the shaft thrust was too long, and would avoid incomplete tilting if the shaft thrust was too short. The outer part of the coupling assembly is attached to the tilting frame and the inner part to the vent motor shaft. The inner and outer coupling parts are joined by two heavy, 4-inch springs.

The coupling assembly can be located nearer to or farther from the corner associated with the tilting frame shaft so that the distance the frame travels is somewhat less, in either direction, than the distance the tilting motor shaft travels. The difference between the two distances of travel is taken up by the springs in the coupling assembly.

Four (one-way) solenoid valves (fig. 14, *A*) are needed to automate the directional change of waterflow. They should be large enough to accommodate a 1/4-inch waterflow. They should also be designed to minimize clogging by incidental solid particles in the circulating system. If clogging of the solenoid valves persists, a large capacity filter must be introduced in a position to filter the water ahead of the valves (just above the water circulators in fig. 1, *A*). Because the solenoid valves must act simultaneously, they must all be activated by the same electrical impulse from the timeclock switch. Therefore, two of the solenoid valves must be normally closed and two normally open.

The solenoid valves are located as indicated by the circles in figure 1, *B*. These valves are mounted on the outside of the insulated box with the brackets illustrated in figure 14, *B*.

A competent electrician should install the wiring to insure that waterflow direction, tilting motor, and lights are activated simultaneously by a single impuse from the timeclock.

The light fixture shown in figure 1, *A* incorporates both fluorescent and incandescent bulbs that produce a light intensity of between 200 and 300 foot-candles on the planting surface under the plastic cover. A light intensity of 100 foot-candles is considered minimal when light is specified as a requirement for seed germination.

Figure 13.—Installed tilting motor and coupling assembly.

Items that can be purchased ready-made for automating processes are:

A heavy hinge for attaching the mounting board to the base

Two pillow block bearings that fit a 1-inch shaft with holes for bolting them to the mounting board

Two heavy, 4-inch springs for the coupling assembly

A tilting motor (often available from greenhouse outfitters as vent motor) having about a 5-inch thrust

Four solenoid valves with 1/4-inch flow capacity, two normally open and two normally closed

A reliable two phase, 24-hour timeclock

Water Circulators

The two-way thermogradient plate requires two water circulators, one operating above ambient temperature and the other below. Water baths with circulator pumps, heaters, refrigeration, water tanks, and thermoregulators assembled in one compact unit are now available through many commercial sources. To maintain a temperature near 0° C. at the low end of the temperature gradient on the planting surface, a good antifreeze solution such as ethylene glycol must be added to the coolant. Take precautions against frost buildup by using adequate insulation on the coolant tanks and channels. Antioxidants should be added to the solutions of both baths to retard corrosion of all metal surfaces. Make sure that any materials added to the water do not produce particulate materials that will clog the solenoid valves.

Monitoring the Temperature Gradient

Experience has shown that there is little need to produce temperature gradient ranges that extend outside a 0 to 50 C. range. Accuracy of the temperature-measuring instrument should be greatest within this range. The temperature is usually measured at the surface of the substratum with copper-constantan thermocouples as indicated in figure 8, *A* and *B*. These are inserted into the germination area by means of the holes in the risers (Detail C of fig. 3, *C*). The plans specify 12 such holes distributed evenly on each side of the two-way thermogradient plate. This number of thermocouples can be monitored manually one by one, or automatically with a sophisticated, multipoint temperature recorder (fig. 1, *A*). Many of the multipoint recorders now on the market accommodate 24 thermocouples, thereby allowing for the distribution of six thermocouples on each side of the plate to give maximum monitoring of the temperature gradients in either direction (fig. 8, *A*). All unused holes in the risers should be sealed with small rubber stoppers.

Applying Substratum to the Plate Surface

Two 19- by 24-inch sheets of blue germination blotter paper are needed to cover the planting surface of the thermogradient plate. One of the sheets is used intact and the other is cut into an 11- by 24-inch piece and a 6- by 24-inch piece. An additional 6- by 6-inch piece is needed to completely cover the plate. The pieces are thoroughly soaked with water and then placed on the plate surface in order by size, with the largest first in one corner of the plate. The sheets swell when saturated with water, causing their final combined dimension to exceed the dimension of the plate surface. However, the excess is simply folded up on the sides of the plate. After the germination paper is

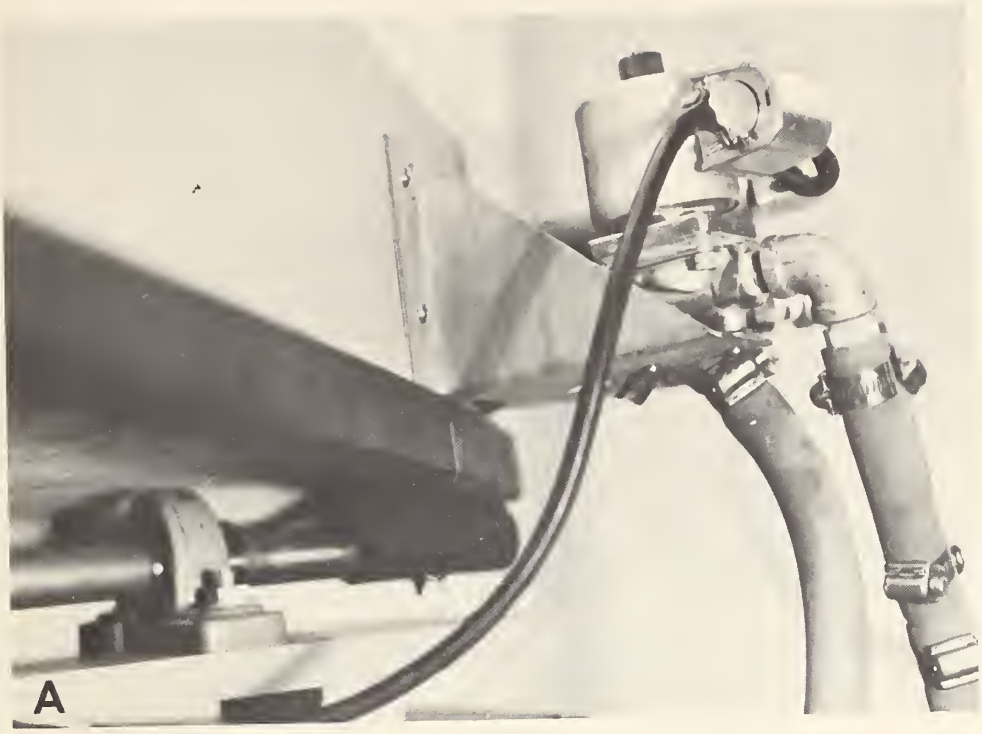

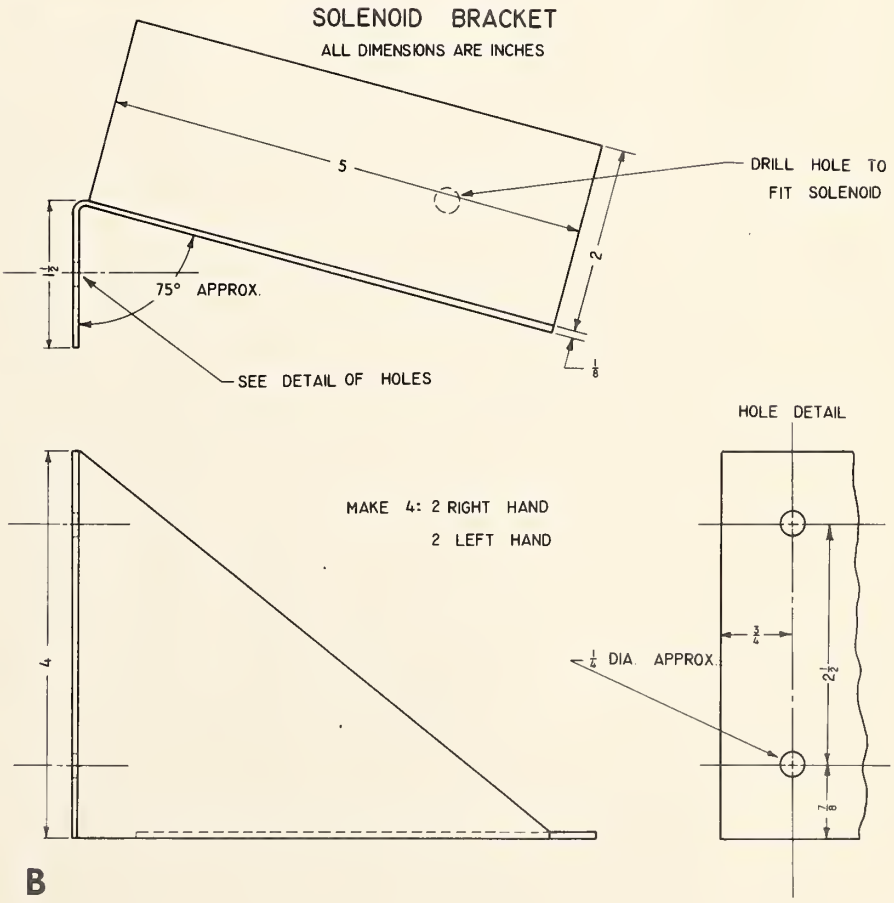

Figure 14.—*A*, Solenoid valve mounted on bracket; *B*, design drawing of suggested bracket shape for supporting solenoid valves.

in position, a firm rubber roller (used in film processing) is used to squeeze out any air bubbles trapped between the paper and the plate.

Planting Seeds on Two-Way Thermogradient Plate

Seeds can be planted and counted easily if a grid is drawn on the moist substratum with an indelible pencil. A convenient arrangement is to draw a line every 5 inches in either direction. If the seeds are planted 1 inch apart, each square on the grid will accommodate 25 seeds. The outside row of seeds must then be planted 1/2 inch inside the perimeter. Usually a vacuum planter can greatly facilitate planting and insure uniform spacing of seeds. After planting is completed, make certain that the substratum is uniformly moist and put the plate cover into position. Removal of the cover causes rapid drying; therefore, seedlings must be counted as quickly as possible. To compensate for drying, add water gently with a plastic "squeeze" bottle to the warm area of the substratum as needed. The linear temperature gradient is also disrupted by removing the cover. However, linearity is recovered within one-half hour after replacing the cover.

Methods of recording the data obtained with the two-way thermogradient plate must vary with kinds of seed and research objectives. Some examples of research completed are given by Larsen[4] and Larsen and Skaggs[5].

---

[4] Larsen, A. L. Use of thermogradient plate for studying temperature effects on seed germination. Internatl. Seed Testing Assoc. Proc. 30: 861-868. 1965.

[5] Larsen, A. L., and Skaggs, D. P. Crambe seed germination response on a thermogradient plate. Assoc. Off. Seed Anal. Proc. 59: 44-50. 1969.

U. S. DEPARTMENT OF AGRICULTURE
AGRICULTURAL RESEARCH SERVICE
HYATTSVILLE, MARYLAND 20782

OFFICIAL BUSINESS
PENALTY FOR PRIVATE USE, $300

POSTAGE AND FEES PAID
U.S. DEPARTMENT OF
AGRICULTURE

U.S.MAIL